LIST OF FIGURES

Figure SM-1. Examples of observed and simulated flow around aerated oxidant candles in narrow and wide flow boxes along with simulated oxidant flow (Kambhu, 2019).

Figure SM-2. (A) Schematic of non-reloadable aerated, slow-release oxidant deployed by direct-push equipment for Freemont Site; (B) Schematic of reloadable aerated, slow-release oxidant deployed by direct-push equipment for Textron and Hoover Sites.

Figure SM-3. Schematic of wide flow box used to compare liquid oxidant versus aerated oxidant candles during transport.

Figure SM-4. Temporal changes in 1,4-dioxane concentrations following installation of permanganate oxidant candles followed by persulfate oxidant candles at the Hoover site.

Table SM-1. Laboratory results from treatability experiments using groundwater from SG-10 (Freeman site) and oxidant candles.

Compound	Control (24 h)	Control (14 d)	Wax Candle	ZVI Candle	Persulfate Candle	Permanganate Candle	Persulfate + ZVI Candle
				μg/L			
Naphthalene	478	260	<100	<100	143	<100	<100
Toluene	1,184	380	<100	334	239	394	<100
1,2,4-Trimethylbenzene	1,036	1,085	<100	<100	283	<100	<100
1,3,5 Trimethylbenzene	232	338	<100	<100	<100	<100	<100
Total Xylenes	5,886	5,400	617	1,588	998	486	<100
Ethylbenzene	1,518	<100	<100	<100	308	<100	<100
Vinyl Acetate	4,136	<500	<500	<500	<500	<500	<500

Table SM-2. Treatability results showing changes in contaminant concentrations of Hoover Site groundwater following treatment with miniature permanganate oxidant candles for 14 d.

	Concentration (μg L^{-1})			Percent Reduction of Oxidant Candle over	
Compound†	**Control (24 h)**	**Control (14 d)**	**Oxidant Candle (14 d)**	**Control (24 h)**	**Control (14 d)**
Acetone	<100	<100	1450	NA‡	NA
Benzene	191	217	139	27.2%	35.9%
2-Butanone	<100	<100	203	NA	NA
Chloroform	13.6	13	<1.00	>92.7%	>92.3%
1,1-Dicholoroethane	438	474	349	20.3%	26.4%
1,2-Dichloroethane	<10.0	16.4	11.2	NA	31.7%
1,1-Dichloroethene	270	297	<2.00	>99.3%	>99.3%
cis-1,2-Dichloroethene	254	266	<1.00	>99.6%	>99.6%
Ethylbenzene	106	103	<1.00	>99.1%	>99.0%
Hexane	136	91.1	<1.00	>99.3%	>98.9%
Isopropylbenzene	21.3	18.7	<1.00	>95.3%	>94.7%
N-Propylbenzene	37.1	33	<1.00	>97.3%	>96.9%
Tetrachloroethene	945	1040	<1.00	>99.9%	>99.9%
Toluene	36.3	43.3	<1.00	>97.3%	>97.7%
1,1,1-Trichloroethane	66.9	70.7	42.9	35.9%	39.3%
1,1,2-Trichloroethane	<10.0	<10.0	4.93	NA	NA
Trichloroethene	130	135	<1.00	>99.2%	>99.3%
1,2,4-Trimethylbenzene	67	50.6	<1.00	>98.5%	>98.0%
1,3,5-Trimethylbenzene	15.8	12.7	<1.00	>93.7%	>92.1%
Vinyl chloride	95	99	<1.00	>98.9%	>98.9%
Xylenes, Total	33.1	30.5	<3.00	>90.9%	>90.2%
1,4-Dioxane		493	277		43.8%

† All analytes were determined using EPA Method 8260C except 1,4-dioxane, which was analyzed by EPA Method 8260C SIM

‡ NA, not applicable, concentrations increased following treatment.

Table SM-3. Acetone and 2-butanone analysis following wax-oxidant 14 d incubations.

Treatment	Acetone	2-butanone
	μg/L	
Water (Control)	ND[†]	ND
Wax + Water	ND	ND
Wax + Persulfate + Iron	344	30.1
Wax + Permanganate	189	25

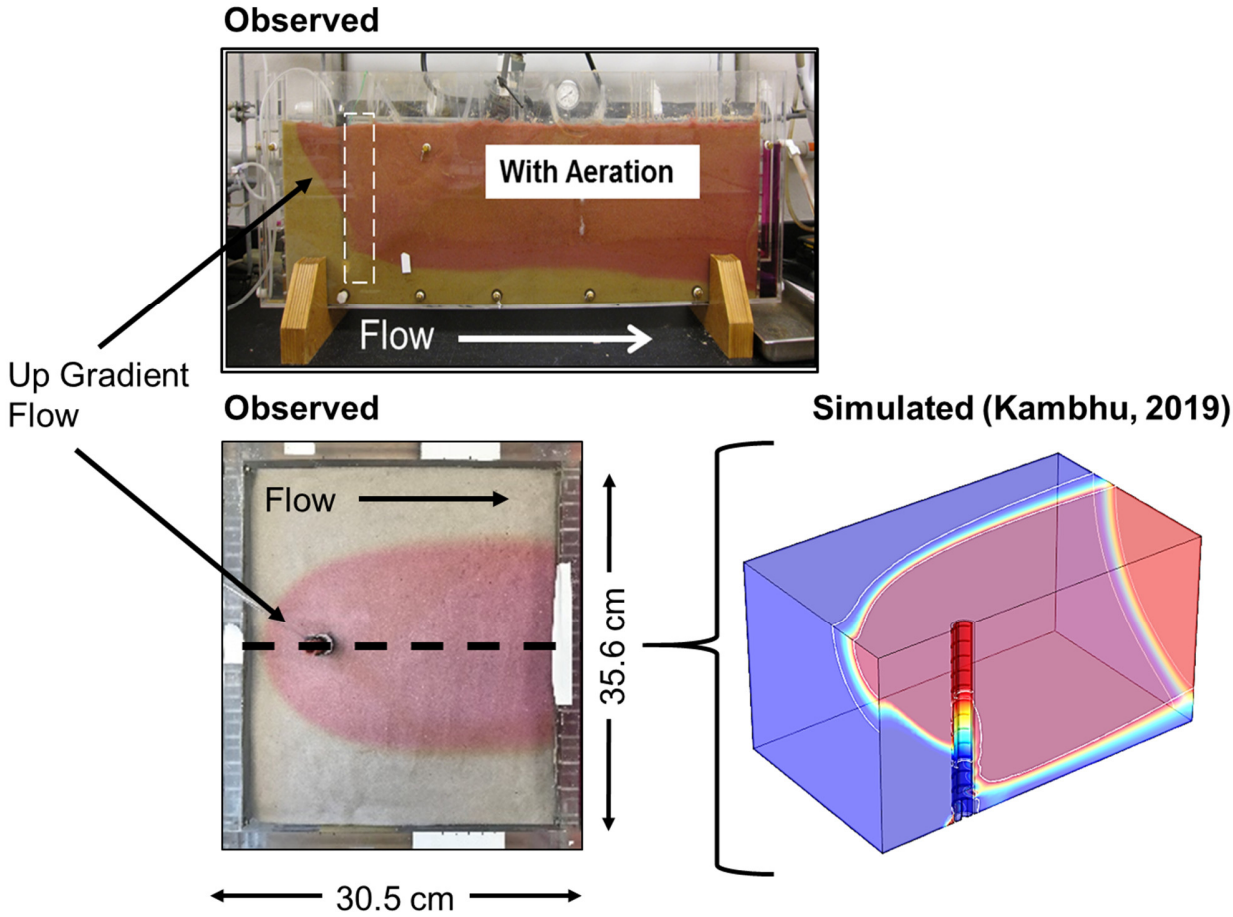

Figure SM-1. Examples of observed and simulated flow around aerated oxidant candles including examples of up gradient flow in narrow and wide flow boxes along with simulated oxidant flow (Kambhu, 2019; Kambhu et al. 2021).

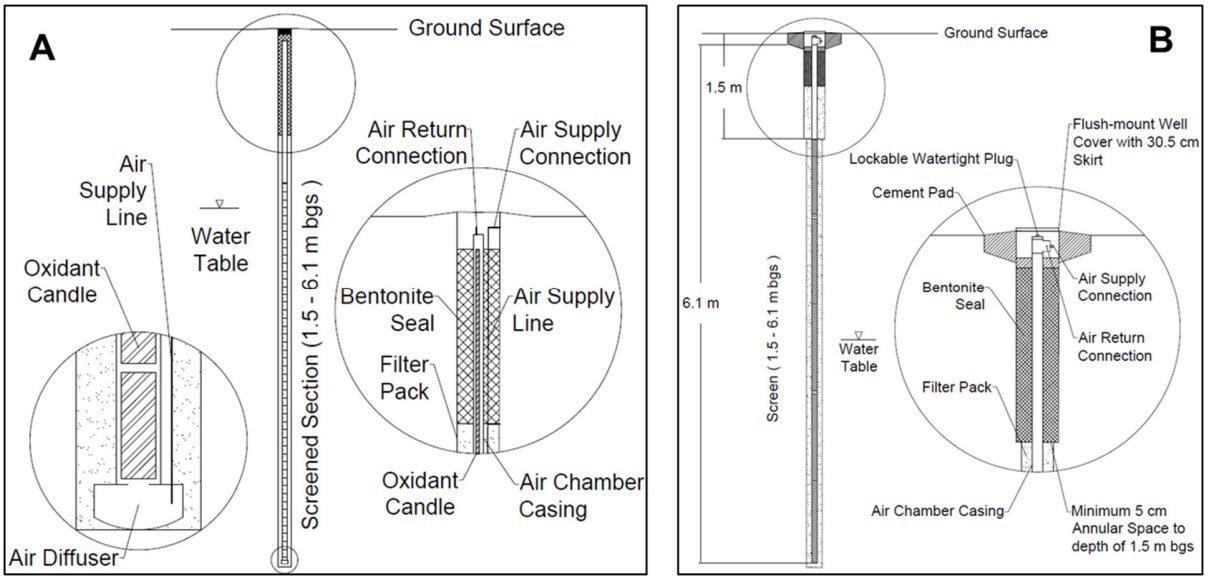

Figure SM-2. (A) Schematic of non-reloadable aerated, slow-release oxidant deployed by direct-push equipment for Freemont Site; (C) Schematic of reloadable aerated, slow-release oxidant deployed by direct-push equipment for Textron and Hoover Sites.

Schematic of Wide Flow Box

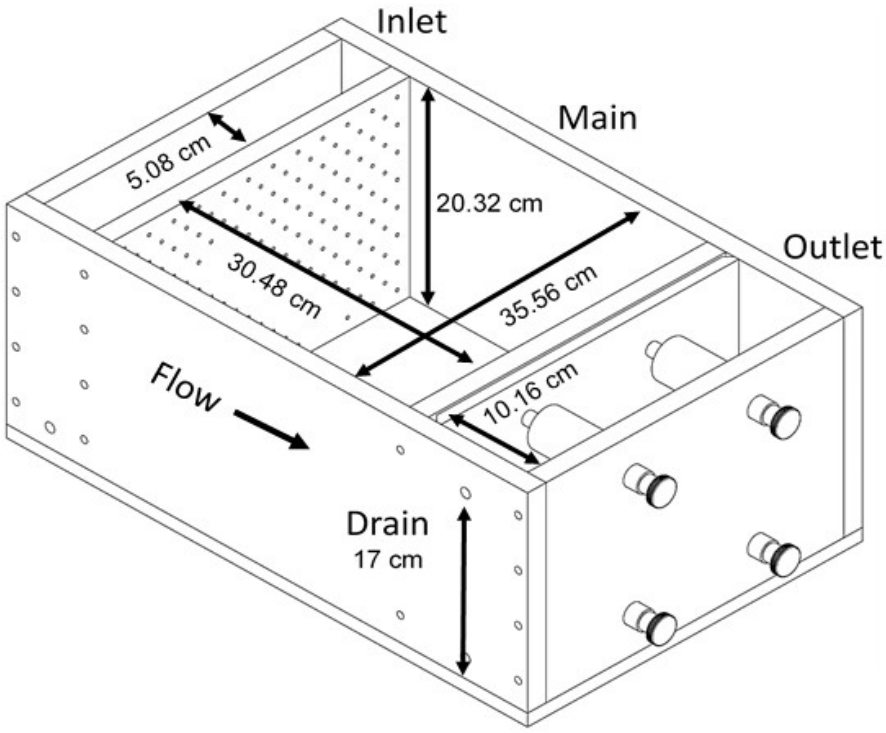

Figure SM-3. Schematic of wide flow box used to compare liquid oxidant versus aerated oxidant candles during transport.

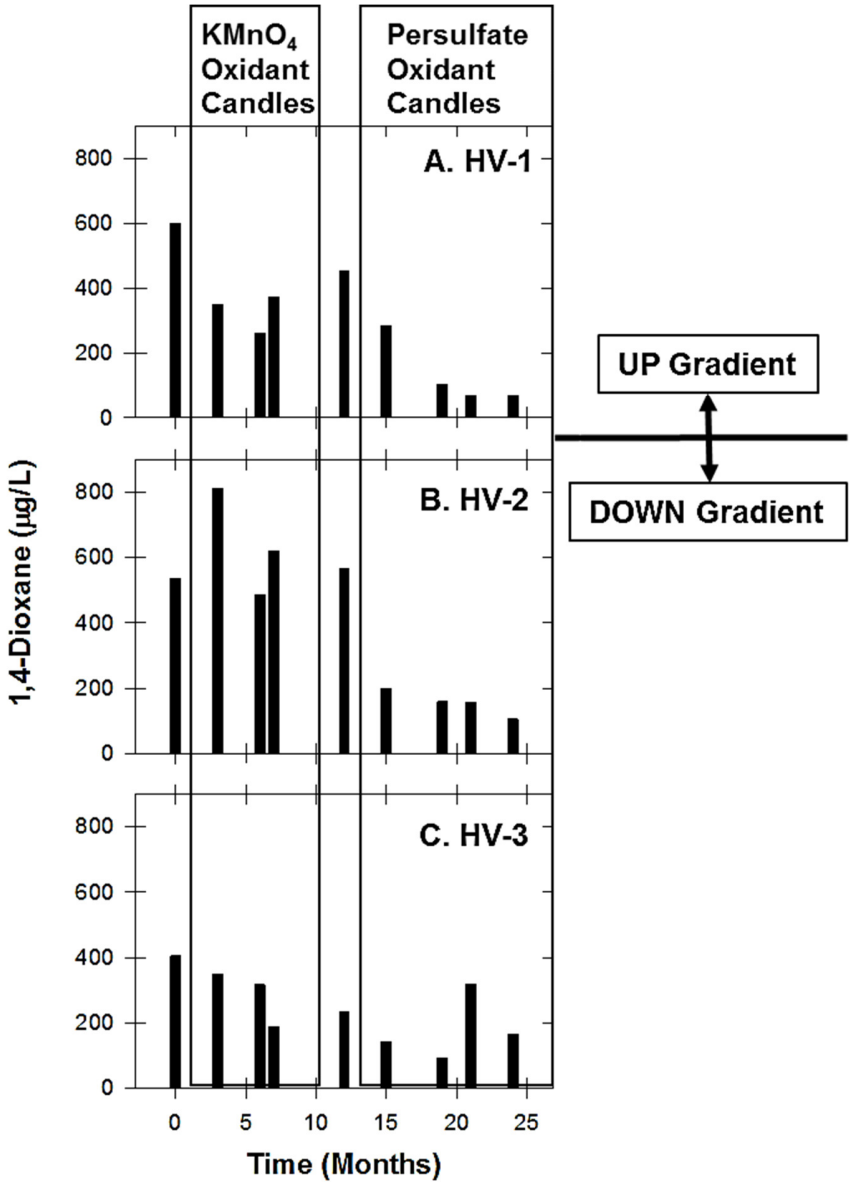

Fig. SM-4. Temporal changes in 1,4-dioxane concentrations following installation of permanganate oxidant candles and persulfate oxidant candles at Hoover site.