applied sciences

MDPI

Article

Improved Epidemic Dynamics Model and Its Prediction for COVID-19 in Italy

Han Wang [1,†], Kang Xu [2,†], Zhongyi Li [3], Kexin Pang [4] and Hua He [1,*]

1 School of Science, Hebei University of Technology, Tianjin 300401, China; wh2020121@163.com
2 School of Economics and Management, Hebei University of Technology, Tianjin 300401, China; xukang8888888@163.com
3 School of Artificial Intelligence, Hebei University of Technology, Tianjin 300401, China; li705474121@163.com
4 Business School, The University of New South Wales, Sydney, NSW 2052, Australia; kexin.pang@student.unsw.edu.au
* Correspondence: hehua@hebut.edu.cn
† These authors contributed equally to this work and should be regarded as co-first authors.

Received: 13 April 2020; Accepted: 13 July 2020; Published: 17 July 2020

Abstract: The outbreak of coronavirus disease 2019 (COVID-19) has become a global public health crisis due to its high contagious characteristics. In this article, we propose a new epidemic-dynamics model combining the transmission characteristics of COVID-19 and then use the reported epidemic data from 15 February to 30 June to simulate the spread of the Italian epidemic. Numerical simulations showed that (1) there was a remarkable amount of asymptomatic individuals; (2) the lockdown measures implemented by Italy effectively controlled the spread of the outbreak; (3) the Italian epidemic has been effectively controlled, but SARS-CoV-2 will still exist for a long time; and (4) the intervention of the government is an important factor that affects the spread of the epidemic.

Keywords: COVID-19; simulation analysis; the infectious disease dynamics model discipline

1. Introduction

In December 2019, a new type of coronavirus pneumonia (COVID-19) broke out in Wuhan, China. Since then, there have been cases of infected individuals in various regions of the world. On 30 January 2020, the WHO listed COVID-19 as an "emergency public health event of international concern" [1]. According to the official statistics of the World Health Organization, as of 30 June 2020, the outbreak of COVID-19 has caused 10,193,723 confirmed cases and 503,867 fatalities globally [2]. The epidemic-prevention situation is extremely severe, and the number of confirmed cases in South Korea, Iran, the United States, and other countries continues to increase, while in Europe, Italy has become the "severe disaster country" of the epidemic. The collapse of the medical system [3] and the high proportion of the elderly population [4] make the mortality rate in Italy much higher than in other regions. According to the official report of the Italian Ministry of Health, as of 30 June 2020, the outbreak of COVID-19 has caused 240,578 confirmed cases and 34,767 fatalities in Italy, and the mortality rate is approximately 14% [5]. In view of the rapid spread of the epidemic nationwide, the Italian government took proactive prevention and control measures. On 10 March 2020, Italy implemented a lockdown measure nationwide.

Scientific and effective calculation of the spread tendency of the epidemic is crucial to the decision on epidemic prevention and restriction. It should rely on theoretically perfect models, reasonable parameters, and accurate predictions. The mathematical models generally advocated to describe the spread of infectious diseases include the Susceptible–Infectious–Recovered model (the SIR model), Susceptible–Exposed–Infectious–Recovered model (the SEIR model),

and Susceptible–Infectious–Diagnosed–Recovered model (the SEIJR model). The main idea is to divide the population into groups such as susceptible, latent, infectious, diagnosed, and recovered ones. We have established differential equations according to the propagation mechanism among various groups and then revealed the spreading laws of the epidemic. The dynamic model is modeled according to the transmission of disease, and the model is interpretable and expandable. Game theory continues to be an effective tool to model intervention decision making by individuals [6]. Chang et al. used game theory to introduce the decision making of individuals into the SIR model and then get the effect of the vaccination on the epidemic [7]. Over the years, numerous research projects and promotions have been built on the original SIR model to meet different epidemic characteristics. As the global epidemic becomes more severe, a more complete infectious-disease model is urgently needed. Many scholars have adopted the infectious-disease-dynamics model for COVID-19 [8–14]. Based on the traditional SEIR model, the population is divided more concretely. Here, we will briefly review the following articles.

The recent work of Tang et al. [8] proposed a deterministic compartment model containing isolation measures and epidemiological conditions, but this model implied that the latent patients are not infectious and therefore does not reflect the dynamics of COVID-19. Yan et al. [9] proposed an infectious-disease-dynamics model based on the time-delay dynamic system, which introduced the time-delayed processes of incubation, recovery, and fatality. However, they did not consider the different types of infected people (symptomatic or asymptomatic), and the definition of patients during the infectious incubation period was not clear. Wu et al. [10] considered traffic factors based on the traditional SEIR model and predicted the number of total cases imported from Wuhan, China, but they did not explicitly consider the impact of quarantine measures in the dynamic. Chen et al. [11] presented an improved epidemic-dynamics model. They combined the multiple characteristics of the new coronavirus but ignored the death process and the difference in the infectiousness of the patients with different symptoms, which cannot be applied to some areas with a high mortality rate. Wang et al. analyzed the impact of the resumption of work on the epidemic in each city by controlling the regeneration number [12]. Due to the uniqueness of COVID-19 and the diversity of outbreaks in different countries, different types of infected individuals require different prevention and control measures, which in turn lead to different fitness and predictions. In addition, most scholars model under the assumption that prevention and control measures are unchanged, but, in fact, different measures will affect the spread of the epidemic to varying degrees [13], so the simulation results will deviate from the actual situation.

To meet the aforementioned issues and realistically reflect the transmission mechanism of COVID-19, we comprehensively consider the characteristics of COVID-19 (numerous asymptomatically infected individuals, different infectious carriers have different infectiousness) and government intervention measures based on the traditional SEIR model and propose a new epidemic model. The model divides the incubation period into quarantined and nonquarantined, adding asymptomatically infected individuals (IA). Meanwhile, we take the difference between asymptomatically and symptomatically infected individuals into account as well as the death process of infected individuals. We build a model called the SEIR_QJD model (SEIR with Quarantined, Dead, and Diagnosed) based on the Italian epidemic data and parameterize it with public data. Parameter analysis can reflect the effects of policy interventions and reveal the inherent laws of epidemic transmission. With these parameters, the modified model may renovate the development of the epidemic analysis and accurately predict the trend of the epidemic. Simultaneously, we simulate the time when the government takes measures and further explore the impact of the government response on the scale of the epidemic.

2. SEIR_QJD Model

The traditional SEIR model (Figure 1) only divides the population into four categories: susceptible (S), exposed (E), infected (I), and recovered (R), which could not describe the transmission law of COVID-19 well.

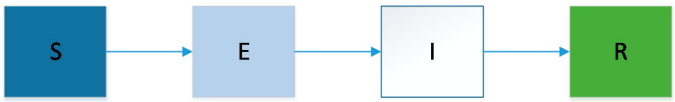

Figure 1. Susceptible–Exposed–Infectious–Recovered (SEIR) epidemic-dynamics model.

In view of the uniqueness of the disease, we designed a new dynamic model to characterize COVID-19:

① Infected individuals during the incubation period are infectious [14].
② There is a large proportion of asymptomatic infected individuals [15].
③ The rate of infection is different between symptomatic and asymptomatic individuals [15].

The new dynamic model comprehensively covers the government's containment measures (lockdown of key epidemic areas, school suspension, and suspension of noncritical production activities) and the classification of infected people (symptomatic and asymptomatic). The model consists of eight objects in the proposed model: susceptible (S), exposed (E), quarantine-exposed (E_Q), asymptomatic infected (IA), symptomatic infected (I), diagnosed (J), recovered (R), and dead (D); we call it the SEIR_QJD for short, and the process is shown in Figure 2.

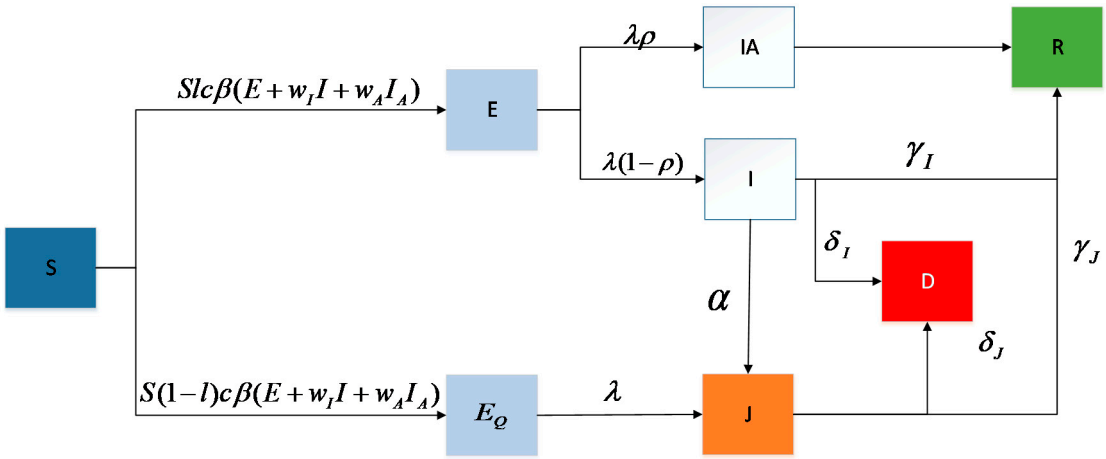

Figure 2. Process illustration.

For the purpose of conciseness, we denote $S(t)$, $E(t)$, $E_Q(t)$, and so on as the amount in the corresponding states at time t. The specific process is described as follows:

- **Infection:** Every primary case (including E, IA, and I status) with infectiousness will transmit the virus to its secondary cases at time t; that is, if a primary case contacts a susceptible individual, the susceptible individual will be infected with a certain probability.
- **Quarantine:** Due to the government's prevention and control measures (suspension, work stoppages, restrictions on the diagnosed individuals, etc.) and people's self-precautionary awareness (self-isolation), each individual in status E_Q and J will be isolated. Note: we assume that the quarantined individuals cannot contact the susceptible ones; namely, it is not contagious.
- **Symptom Onset:** Individuals in states E, E_Q will become symptomatic after the infectious incubation period and will transition to states I and J at the rate of λ.
- **Recovery:** Individuals in states I_A, I, and J will recover at rates of γ_A, γ_I, and γ_J, respectively.

- **Death:** Individuals in states I and J will die at rates of δ_I and δ_J, respectively. Note: as the mortality rates of asymptomatic and mild-symptomatic individuals are extremely low, the death of asymptomatic infections is not included.

Meanwhile, we get the dynamic model defined by the following differential equations:

$$\frac{dS(t)}{dt} = -S(t)l\beta(E(t) + \omega_I I(t) + I_A(t)) - S(t)(1-l)\beta(E(t) + \omega_I I(t) + I_A(t)) \tag{1}$$

$$\frac{dE(t)}{dt} = S(t)(1-l)\beta(t)(E(t) + \omega_I I(t) + I_A(t)) - \lambda E(t) \tag{2}$$

$$\frac{dE_Q(t)}{dt} = S(t)l\beta(t)(E(t) + \omega_I I(t) + I_A(t)) - \lambda E_Q(t) \tag{3}$$

$$\frac{dI_A(t)}{dt} = \lambda\rho E(t) - \gamma_A I_A(t) \tag{4}$$

$$\frac{dI(t)}{dt} = \lambda(1-\rho)E(t) - (\delta_I + \gamma_I + \alpha)I(t) \tag{5}$$

$$\frac{dJ(t)}{dt} = \alpha I(t) + \lambda E_Q(t) - \left(\delta_J + \gamma_J\right)J(t) \tag{6}$$

$$\frac{dR(t)}{dt} = \gamma_A I_A(t) + \gamma_I I(t) + \gamma_J J(t) \tag{7}$$

$$\frac{dD(t)}{dt} = \delta_I I(t) + \delta_J J(t) \tag{8}$$

3. Estimation of Model Parameters

Given the values of parameters $l, \beta, w_I, \lambda, \rho, \alpha, \gamma_A, \gamma_I, \gamma_J, \delta_I, \delta_J$ and the initial conditions $\left\{S(t_0), E(t_0), E_Q(t_0), I(t_0), I_A(t_0), J(t_0), R(t_0), D(t_0)\right\}$ of each group, the evolution of the epidemic can be simulated by Equations (1)–(8). The initial state t_0 represents the time when the first batch of infected people appeared (according to roughly 40% of asymptomatic individuals among infected ones [14], we assume that five patients are symptomatic and three patients are asymptomatic). Because the first cases discovered in Italy were all imported cases, we assume that $E(t_0) = 0, E_Q(t_0) = 0$, and $J(t_0), R(t_0), D(t_0)$ can be obtained from the reporting data. Besides, we set the initial value of the susceptible $E(t_0)$ to unknown and estimate it together with other model parameters as described below. Since the number of exposures available to susceptible people is limited, we do not consider the total population of Italy as susceptible.

Since the SEIR_QJD model contains a relatively large number of parameters, the model could be overfitted while the available data are limited, which will affect the results and mislead the epidemic judgment. The proposed model consists of 11 parameters: $l, \beta, w_I, \lambda, \rho, \alpha, \gamma_A, \gamma_I, \gamma_J, \delta_I, \delta_J$, of which $\gamma_A, \gamma_I, \gamma_J, \delta_I, \delta_J$ are related to the clinical characteristics of the disease and can be prefixed by relevant studies. Since the official report data show that $R(t)$ and $D(t)$ are only related to the diagnosed individuals $J(t)$, we can roughly estimate them from the related data with the approximate equation $\gamma_J \approx (R(t+1) - R(t))/J(t)$, $\delta_J \approx (D(t+1) - D(t))/J(t)$. The remaining parameters will be estimated according to the model. By observing the trend chart of γ_J and δ_J, in Figures 3 and 4, respectively, it can be found that the change in γ_J over time is not significant, while that of δ_J decreases continuously over time. Meanwhile, in order to reflect the effects of government interventions and medical investment, we will consider β and δ_J as time-varying parameters, that is, $\beta(t) = 1_{\{t<T_1+t'\}}\beta_0 + 1_{\{t>T_1+t'\}}c\beta_0$ and $\delta_J = f(t)$; see Figure 4 for specific functions of $f(t)$. The time T_1 is set to be the time when Italy implemented the nationwide lockdown measure, t' is the lag time of the implementation, and the time T_2 is set to the end of Italy's lockdown measure.

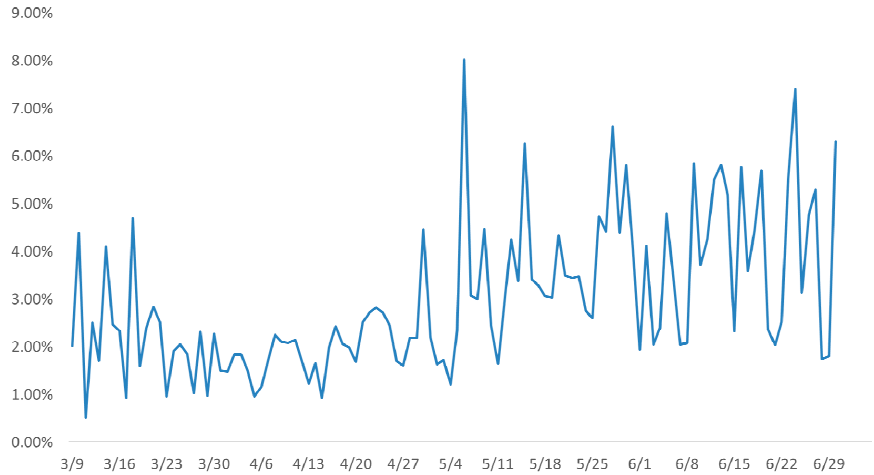

Figure 3. The plot of the recovery rate of diagnosed patients.

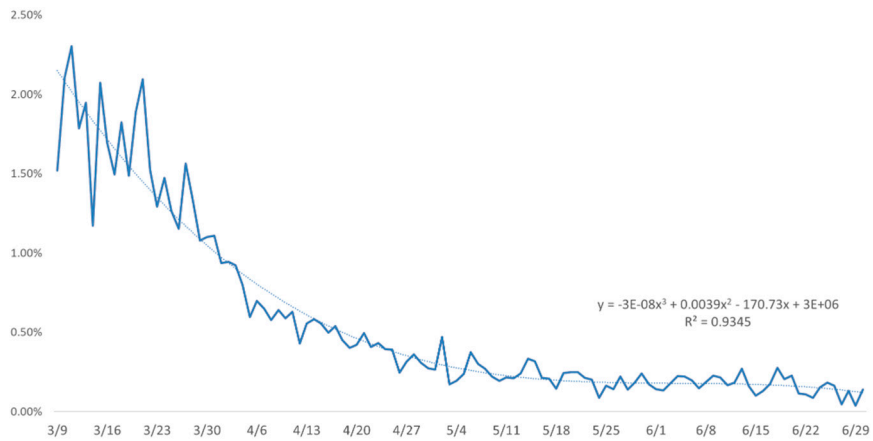

Figure 4. The plot of the fatality rate for diagnosed patients.

The likelihood function is obtained by assuming that daily confirmed cases are independent Poisson random variables [10], that is:

$$L(l, \beta, w_I, \rho, a) = \sum_{i=1}^{k} \log \frac{e^{-\lambda_i} \lambda_i{}^{\Delta J_i}}{\Delta J_i!} \tag{9}$$

where ΔJ is the newly confirmed cases per day and λ_i is the functions of model parameters $l, \beta, w_I, \rho, a, S(0)$ based on the differential Equations (1)–(8). We use the Markov chain Monte Carlo (MCMC) algorithm to fit the model based on Italian epidemic data from 15 February to 30 June (see Appendix A), where noninformative uniform distributions are chosen as the prior distributions; the specific information is in Table 1.

Table 1. SEIR_QJD parameter setting (Italy).

Parameter	Definitions	Search Range	Estimated Mean Value
$S(t_0)$	The initial value of susceptible individuals	$5 \times 10^5 \sim 1 \times 10^6$	714, 253
l	The probability of incubation individuals being detected	$0.10 \sim 0.90$	0.2495
β	The contact rate between susceptible and incubation individuals (roughly estimated by R_0)	$1.0 \times 10^{-7} \sim 1.0 \times 10^{-6}$	4.01×10^{-7}

Table 1. *Cont.*

Parameter	Definitions	Search Range	Estimated Mean Value
c_1	Adjustment coefficient of β with the government's lockdown measures	0.20 ~ 0.80	0.3068
c_2	Adjustment coefficient of β with the government lifting the blockade	1.00 ~ 2.00	1.0949
w_I	The infectiousness of symptomatic individuals relative to incubation ones	2.0	2.0[12]
λ	The speed of individuals from exposed to infected, which is the reciprocal of the incubation period	1/5.3	1/5.9
ρ	The proportion of asymptomatic individuals among all infected ones	0.10 ~ 0.60	0.4099
α	The diagnosed speed of symptomatic individuals	0.0 ~ 0.5	0.0788
γ_A, γ_I	The recovery rate of infected individuals	0.1	0.1[9]
γ_J	The recovery rate of diagnosed individuals	0.01887	0.01887
δ_I, δ_J	The mortality rate of infected and diagnosed individuals	$f(t)$	$f(t)$

4. Empirical Analysis

1. Fitting Effect: Based on the cumulative number of confirmed cases in Italy as of 30 June 2020, we used the SEIR_QJD model for data fitting. The fitting effect of the model is measured by calculating the average deviation between the actual and simulated cumulative number of confirmed cases (Table 2). The curve fitting of Italian epidemic cases is shown in Figure 5.

Table 2. Model fitting effect.

Region	Evaluation Index	Distribution Range
Italy	The estimated deviation in the past 30 days. (%)	−0.33~0.20%
	The estimated deviation in the past 60 days. (%)	−1.73~0.20%
	The estimated deviation in the past 90 days. (%)	−1.73~2.95%

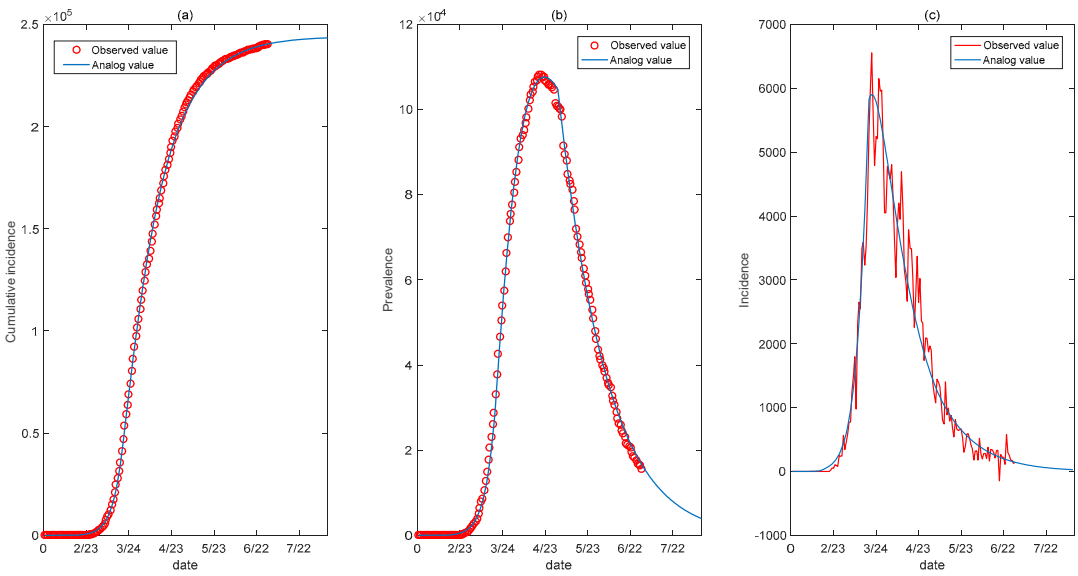

Figure 5. Simulation of epidemic-situation development trend. Simulation of the epidemic spread in Italy. Fitting curves: cumulative incidence (**a**), prevalence (**b**), incidence (**c**).

This paper evaluates the fitting effect of the model by calculating the deviation between the simulated value and the real value (Table 2). The average deviation of the model in the past 90 days was 0.86%, and the maximum deviation was controlled within 2.95%. Overall, the fitting effect of the model was very good and, to a great extent, largely simulated the development of the Italian epidemic.

2. The duration of the epidemic is relatively long. With the change in government control, people's awareness of epidemic prevention, medical level, and other factors, the contact rate between susceptible and infected people will also change accordingly. This paper describes the change by constructing a time-varying function of the contact rate. During the implementation of the nationwide "lockdown measures" in Italy, the time-varying parameters changed significantly (adjustment coefficient c_1 was 0.4364), while after the closure measures, the change of time-varying parameters was insignificant, indicating that the epidemic situation in Italy was basically under control and there was no secondary outbreak. Furthermore, according to the model (1–8), we used the regeneration matrix to get the formula of the regeneration number:

$$R_c = [\frac{\beta(1-\rho)w_I(1-l)}{\delta_I+\gamma_I+a} + \frac{\beta\rho w_A(1-l)}{\gamma_A} + \frac{\beta(1-l)}{\lambda}]S_0 \tag{10}$$

The regeneration numbers of the three stages were $R_{c0} = 2.9527$, $R_{c1} = 0.7064$, and $R_{c2} = 0.8204$, respectively, indicating that the government's prevention and control measures suppressed the spread of the epidemic effectively.

3. COVID-19 is a disease with strong spreading ability, which can be effectively controlled under good public health conditions and quarantine measures. In order to analyze the impact of the government's response on the epidemic, this paper simulates four different situations by changing the time of the government interventions, which is based on time-varying parameters (Figure 6). The analysis showed that the government's timely intervention measures could reduce the scale of the disease significantly. This paper only takes Italy's "closure measures" into account; in practice, it still needs to be comprehensively considered according to the local epidemic situation.

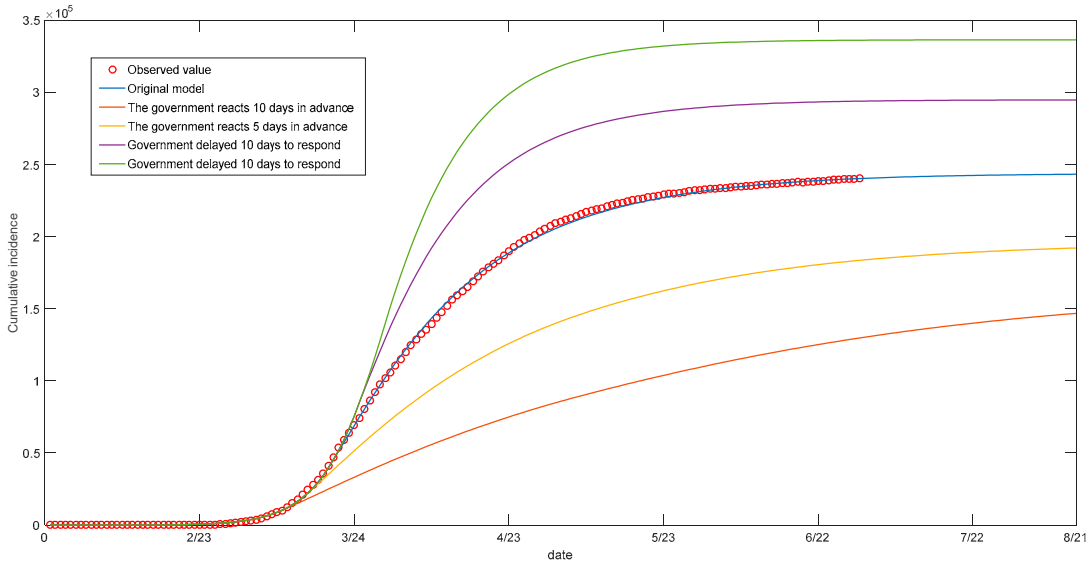

Figure 6. Simulation of the spread of the epidemic.

4. The proportion of asymptomatic and undetected patients in Italy is approximately 40%, which accounts for a relatively high proportion of total infected people. Therefore, the government needs to strengthen the detection of close contacts of cases.

Overall, the model has good generalizability and can change the parameters according to the different regions to simulate the spread of the epidemic and provide scientific judgment for epidemic prevention and control decisions.

5. Discussion

In response to the characteristics of coronavirus disease 2019 (COVID-19), the infectiousness during the incubation period, the specificity of a large proportion of asymptomatic infections, and the strong government interventions, we proposed a SEIR_QJD epidemic-dynamics model that comprehensively considers the characteristics of infectious diseases and the impact of overall prevention and control measures to make it closely related to the reality.

According to the analysis results, the government intervention in Italy has effectively contained the spread of the epidemic. At the same time, after the lifting of the blockade, the Italian epidemic has not rebounded, indicating that the epidemic was controlled effectively. However, there is still a long time until the epidemic is completely over, so the government should continue to strengthen the prevention and control of the epidemic to avoid a second outbreak. In addition, due to the existence of a large number of asymptomatic infected people, which has increased the difficulty of controlling the epidemic, the government should strengthen the detection of the individuals who are asymptomatic and strengthen the isolation of confirmed patients and the medical observation of close contacts.

Recently, the number of new confirmed cases per day in Italy has shown a slight increase, so the maintenance of the current prevention and control measures is of great importance. Both the infection rate and isolation rate measure the ability of the virus to spread, so blocking transmission is the key. However, Italy's restrictions have now been lifted; we advise citizens to reduce public activities, strengthen self-protection, and wear masks when going out. People should seek medical treatment or self-quarantine after developing symptoms such as fever and dry cough so as not to spread the virus to others.

Author Contributions: Conceptualization, H.W. K.X. and Z.L.; Data curation, H.W. and K.X.; Methodology, H.W. and K.X.; Supervision, K.P.; Visualization, H.W. and K.X.; Writing—original draft, H.W. and K.X.; Writing—Review & editing, H.H. All authors have read and agreed to the published version of the manuscript.

Funding: This research was funded by Natural Science Foundation of Hebei Province (Grant No. A2020202005).

Conflicts of Interest: The authors declare no conflict of interest.

Appendix A

Table A1. Data from 15 February to 30 June 2020 (Italy) [5].

Date	Incidence	Cumulative incidence	Prevalence	Date	Incidence	Cumulative incidence	Prevalence
15 February 2020	0	3	3	24 April 2020	3021	192,994	106,527
16 February 2020	0	3	3	25 April 2020	2357	195,351	105,847
17 February 2020	0	3	3	26 April 2020	2324	197,675	106,103
18 February 2020	0	3	3	27 April 2020	1739	199,414	105,813
19 February 2020	0	3	3	28 April 2020	2091	201,505	105,205
20 February 2020	1	4	4	29 April 2020	2086	203,591	104,657
21 February 2020	17	21	19	30 April 2020	1872	205,463	101,551
22 February 2020	55	76	75	1 May 2020	1965	207,428	100,943
23 February 2020	48	124	121	2 May 2020	1900	209,328	100,704
24 February 2020	105	229	222	3 May 2020	1389	210,717	100,179
25 February 2020	93	322	311	4 May 2020	1221	211,938	99,980
26 February 2020	78	400	385	5 May 2020	1075	213,013	98,467
27 February 2020	250	650	588	6 May 2020	1444	214,457	91,528
28 February 2020	238	888	821	7 May 2020	1,401	215,858	89,624
29 February 2020	240	1128	1049	8 May 2020	1327	217,185	87,961
1 March 2020	566	1694	1577	9 May 2020	1,083	218,268	84,842
2 March 2020	342	2036	1835	10 May 2020	802	219,070	83,324
3 March 2020	466	2502	2263	11 May 2020	744	219,814	82,488
4 March 2020	587	3089	2706	12 May 2020	1402	221,216	81,266
5 March 2020	769	3858	3296	13 May 2020	888	222,104	78,457
6 March 2020	778	4636	3916	14 May 2020	992	223,096	76,440
7 March 2020	1247	5883	5061	15 May 2020	789	223,885	72,070
8 March 2020	1492	7375	6387	16 May 2020	875	224,760	70,187
9 March 2020	1797	9172	7985	17 May 2020	675	225,435	68,351
10 March 2020	977	10,149	8514	18 May 2020	541	225,886	66,553
11 March 2020	2313	12,462	10,590	19 May 2020	813	226,699	65,129
12 March 2020	2651	15,113	12,839	20 May 2020	665	227,364	62,752
13 March 2020	2547	17,660	14,955	21 May 2020	642	228,006	60,960
14 March 2020	3497	21,157	17,750	22 May 2020	652	228,658	59,322
15 March 2020	3590	24,747	20,603	23 May 2020	669	229,327	57,752

Table A1. *Cont.*

Date	Incidence	Cumulative incidence	Prevalence	Date	Incidence	Cumulative incidence	Prevalence
16 March 2020	3233	27,980	23,073	24 May 2020	531	229,858	56,594
17 March 2020	3526	31,506	26,062	25 May 2020	300	230,158	55,300
18 March 2020	4207	35,713	28,710	26 May 2020	397	230,555	52,942
19 March 2020	5322	41,035	33,190	27 May 2020	584	231,139	50,966
20 March 2020	5986	47,021	37,860	28 May 2020	593	231,732	47,986
21 March 2020	6557	53,578	42,681	29 May 2020	516	232,248	46,175
22 March 2020	5559	59,137	46,638	30 May 2020	416	232,664	43,691
23 March 2020	4790	63,927	50,418	31 May 2020	355	233,019	42,097
24 March 2020	5249	69,176	54,030	1 June 2020	178	233,197	41,367
25 March 2020	5210	74,386	57,521	2 June 2020	318	233,515	39,893
26 March 2020	6153	80,539	62,013	3 June 2020	321	233,836	39,297
27 March 2020	5959	86,498	66,414	4 June 2020	177	234,013	38,429
28 March 2020	5974	92,472	70,065	5 June 2020	518	234,531	36,976
29 March 2020	5217	97,689	73,880	6 June 2020	270	234,801	35,877
30 March 2020	4050	101,739	75,528	7 June 2020	197	234,998	35,262
31 March 2020	4053	105,792	77,635	8 June 2020	280	235,278	34,730
1 April 2020	4782	110,574	80,572	9 June 2020	283	235,561	32,872
2 April 2020	4668	115,242	83,049	10 June 2020	202	235,763	31,710
3 April 2020	4585	119,827	85,388	11 June 2020	379	236,142	30,637
4 April 2020	4805	124,632	88,274	12 June 2020	163	236,305	28,997
5 April 2020	4316	128,948	91,246	13 June 2020	346	236,651	27,485
6 April 2020	3599	132,547	93,187	14 June 2020	338	236,989	26,274
7 April 2020	3039	135,586	94,067	15 June 2020	301	237,290	25,909
8 April 2020	3836	139,422	95,262	16 June 2020	210	237,500	24,569
9 April 2020	4204	143,626	96,877	17 June 2020	328	237,828	23,925
10 April 2020	3951	147,577	98,273	18 June 2020	331	238,159	23,101
11 April 2020	4694	152,271	100,269	19 June 2020	-148	238,011	21,543
12 April 2020	4092	156,363	102,253	20 June 2020	264	238,275	21,212
13 April 2020	3153	159,516	103,616	21 June 2020	224	238,499	20,972
14 April 2020	2972	162,488	104,291	22 June 2020	221	238,720	20,637
15 April 2020	2667	165,155	105,418	23 June 2020	113	238,833	19,573
16 April 2020	3786	168,941	106,607	24 June 2020	577	239,410	18,655
17 April 2020	3493	172,434	106,962	25 June 2020	296	239,706	18,303

Table A1. *Cont.*

Date	Incidence	Cumulative incidence	Prevalence	Date	Incidence	Cumulative incidence	Prevalence
18 April 2020	3491	175,925	107,771	26 June 2020	255	239,961	17,638
19 April 2020	3047	178,972	108,257	27 June 2020	175	240,136	16,836
20 April 2020	2256	181,228	108,237	28 June 2020	174	240,310	16,681
21 April 2020	2729	183,957	107,709	29 June 2020	126	240,436	16,496
22 April 2020	3370	187,327	107,699	30 June 2020	142	240,578	15,563
23 April 2020	2646	189,973	106,848				

References

1. World Health Organization (WHO). Statement on the Second Meeting of the International Health Regulations (2005) Emergency Committee Regarding the Outbreak of Novel Coronavirus (2019-nCoV). Available online: https://www.who.int/news-room/detail/30-01-2020-statement-on-the-second-meeting-of-the-international-health-regulations-(2005)-emergency-committee-regarding-the-outbreak-of-novel-coronavirus-(2019-ncov) (accessed on 1 July 2020).
2. World Health Organization (WHO). Coronavirus Disease (COVID-19) Outbreak Situation. Available online: https://who.sprinklr.com/region/euro/country/it (accessed on accessed on 1 July 2020).
3. Singanayagam, A.; Glanville, N.; Girkin, J.L.; Ching, Y.M.; Marcellini, A.; Porter, J.D.; Toussaint, M.; Walton, R.P.; Finney, L.J.; Aniscenko, J.; et al. Corticosteroid suppression of antiviral immunity increases bacterial loads and mucus production in COPD exacerbations. *Nat. Commun.* **2018**, *9*, 1–16. [CrossRef] [PubMed]
4. Onder, G.; Rezza, G.; Brusaferro, S. Case-Fatality Rate and Characteristics of Patients Dying in Relation to COVID-19 in Italy. *JAMA* **2020**, *323*, 1775–1776. [CrossRef] [PubMed]
5. Italian Ministry of Health. Available online: http://www.salute.gov.it/portale/home.html (accessed on 1 July 2020).
6. Chang, S.L.; Piraveenan, M.; Pattison, P.; Prokopenko, M. Game theoretic modelling of infectious disease dynamics and intervention methods: A review. *J. Biol. Dyn.* **2020**, *14*, 57–89. [CrossRef] [PubMed]
7. Chang, S.L.; Piraveenan, M.; Prokopenko, M. The Effects of Imitation Dynamics on Vaccination Behaviours in SIR-Network Model. *Int. J. Environ. Res. Public Health* **2019**, *16*, 2477. [CrossRef] [PubMed]
8. Tang, B.; Wang, X.; Li, Q.; Bragazzi, N.L.; Tang, S.; Xiao, Y.; Wu, J. Estimation of the Transmission Risk of the 2019-nCoV and Its Implication for Public Health Interventions. *J. Clin. Med.* **2020**, *9*, 462. Available online: https://ssrn.com/abstract=3525558 (accessed on 24 January 2020). [CrossRef] [PubMed]
9. Yan, Y.; Chen, Y.; Liu, K.J.; Luo, X.Y.; Xu, B.X.; Jiang, Y.; Cheng, J. Modeling and prediction for the trend of outbreak of NCP based on a time-delay dynamic system. *Sci. Sin. Math.* **2020**, *50*, 385–392. (In Chinese) [CrossRef]
10. Wu, J.T.; Leung, K.; Leung Gabriel, M. Nowcasting and forecasting the potential domestic and international spread of the 2019-nCoV outbreak originating in Wuhan, China: A modelling study. *Lancet* **2020**, *395*, 689–697. [CrossRef]
11. Wei, Y.Y.; Lu, Z.Z.; Du, Z.C.; Zhang, Z.J.; Zhao, Y.; Shen, S.P.; Wang, B.; Hao, Y.T.; Chen, F. Fitting and forecasting the trend of COVID-19 by SEIR(+ CAQ) dynamic model. *Zhonghua liu xing bing xue za zhi Zhonghua liuxingbingxue zazhi* **2020**, *41*, 470–475. [PubMed]
12. Wang, X.; Tang, S.Y.; Chen, Y.; Feng, X.M.; Xiao, Y.N.; Xu, Z.B. When will be the resumption of work in Wuhan and its surrounding areas during COVID-19 epidemic? A data-driven network modeling analysis. *Sci. Sin. Math.* **2020**, *50*, 1–10. (In Chinese) [CrossRef]
13. Chang, S.L.; Harding, N.; Zachreson, C.; Cliff, O.; Prokopenko, M. Modelling transmission and control of the COVID-19 pandemic in Australia. *arXiv* **2003**, arXiv:2003.10218.
14. State Council Information Office of the People's Republic of China. State Council Information Office Holds Press Conference on Joint Prevention and Control of Pneumonia Outbreak with New Coronavirus Infection. 2020; (In Chinese). Available online: http://www.scio.gov.cn/xwfbh/xwbfbh/wqfbh/42311/42478/index.htm (accessed on accessed on 1 July 2020).
15. Zhang, Y.; You, C.; Cai, Z.; Sun, J.; Hu, W.; Zhou, X.H. Prediction of the COVID-19 outbreak based on a realistic stochastic model. *medRxiv* **2020**. [CrossRef]